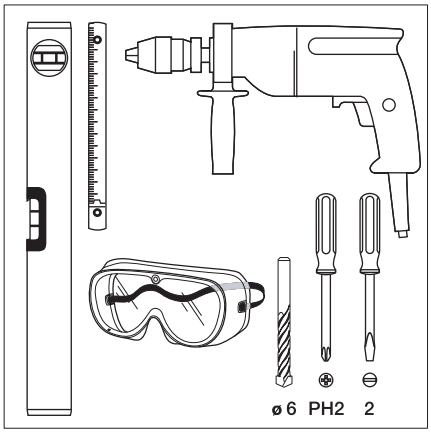

1

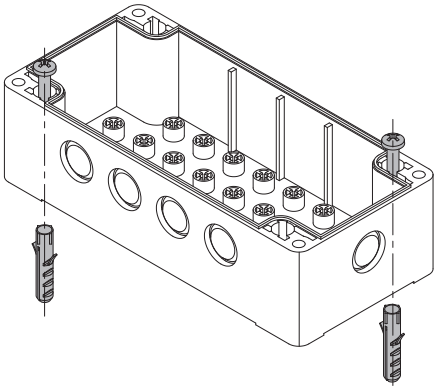

2

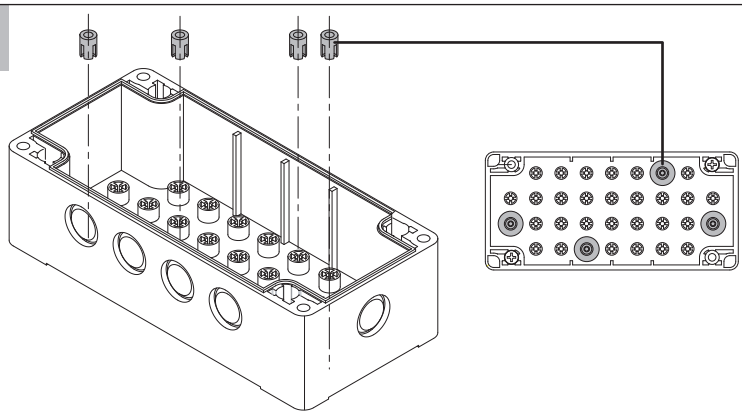

3

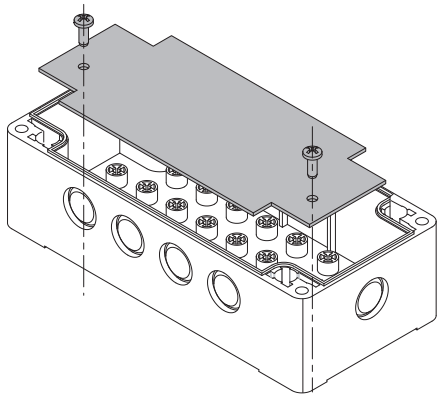

4

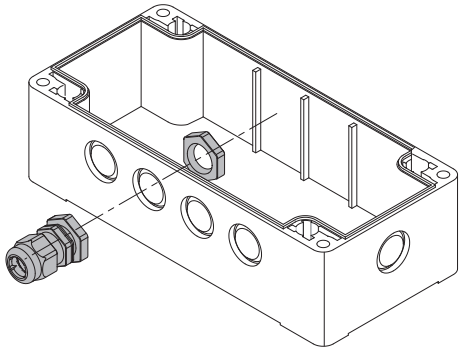

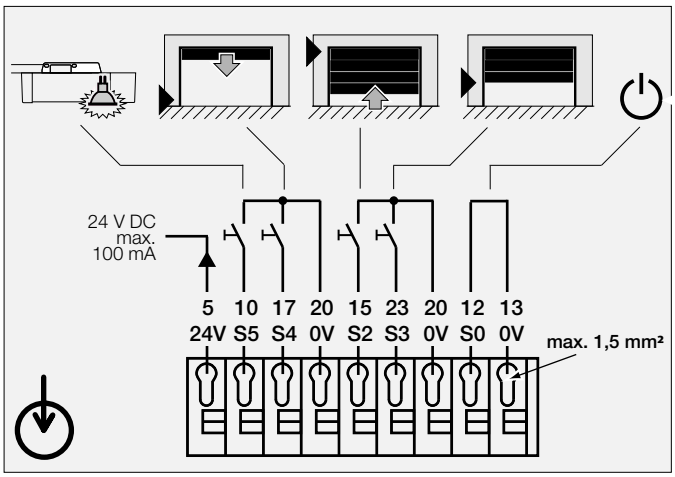
24 V DC
max.
100 mA
5 10 17 20 15 23 20 12 13
24V S5 S4 0V S2 S3 0V S0 0V
max. 1,5 mm²

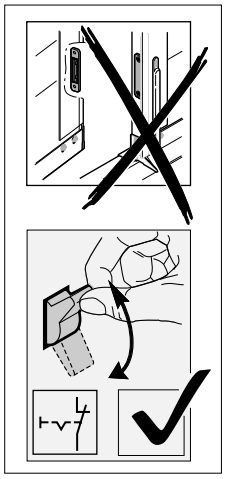

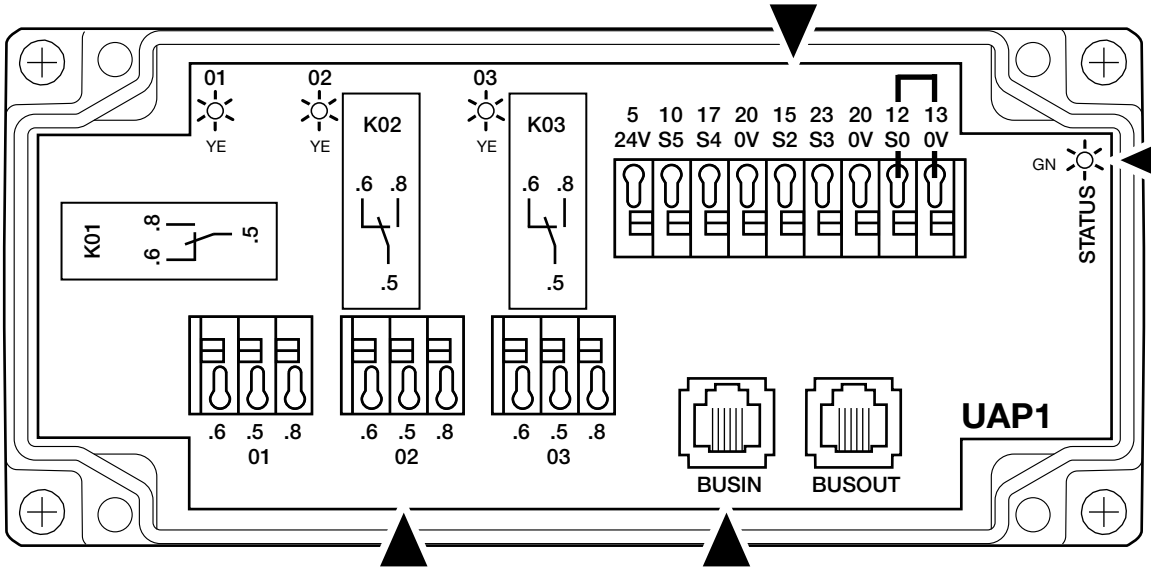
01
02
03
YE
YE
YE
K01
K02
K03
.6 .8
.5
5 10 17 20 15 23 20 12 13
24V S5 S4 0V S2 S3 0V S0 0V
GN
STATUS
.6 .5 .8
01
02
03
BUSIN
BUSOUT
UAP1

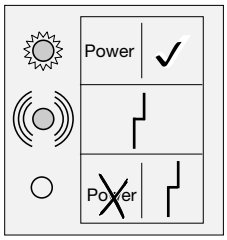
Power
Power

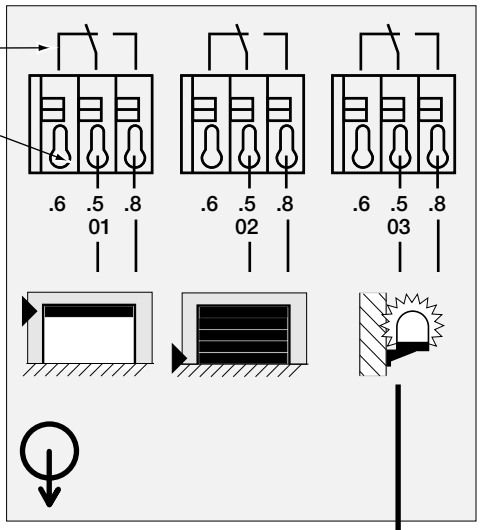
max. 2,5 A/30 V DC
500 W/250 V AC
max. 1,5 mm²
.6 .5 .8
01
02
03

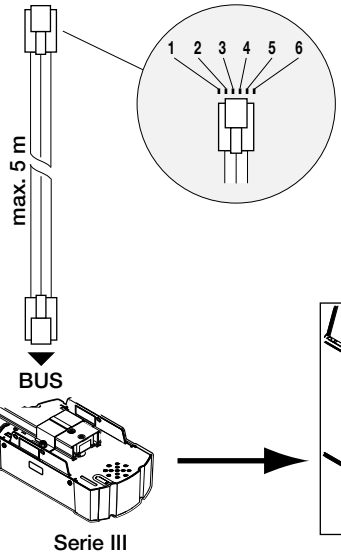
1 2 3 4 5 6
max. 5 m
BUS
Serie III

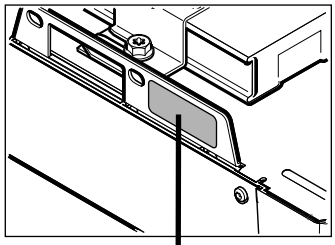

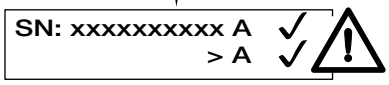
SN: xxxxxxxxxx A
> A

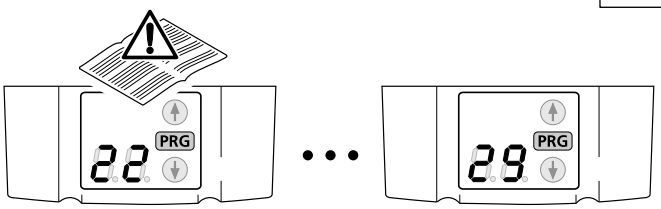
PRG
22
PRG
29

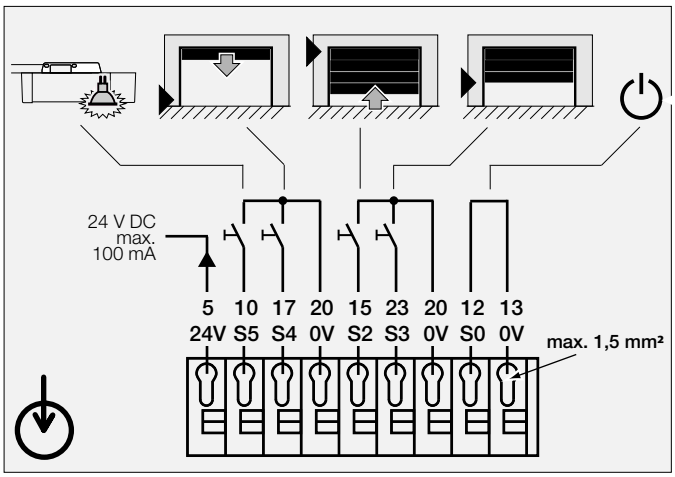
24 V DC
max.
100 mA
5 10 17 20 15 23 20 12 13
24V S5 S4 0V S2 S3 0V S0 0V
max. 1,5 mm²

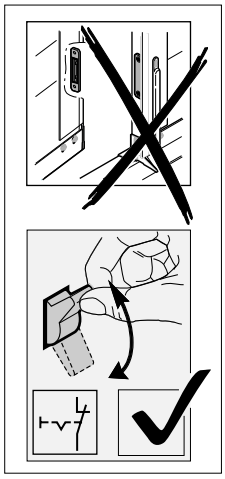

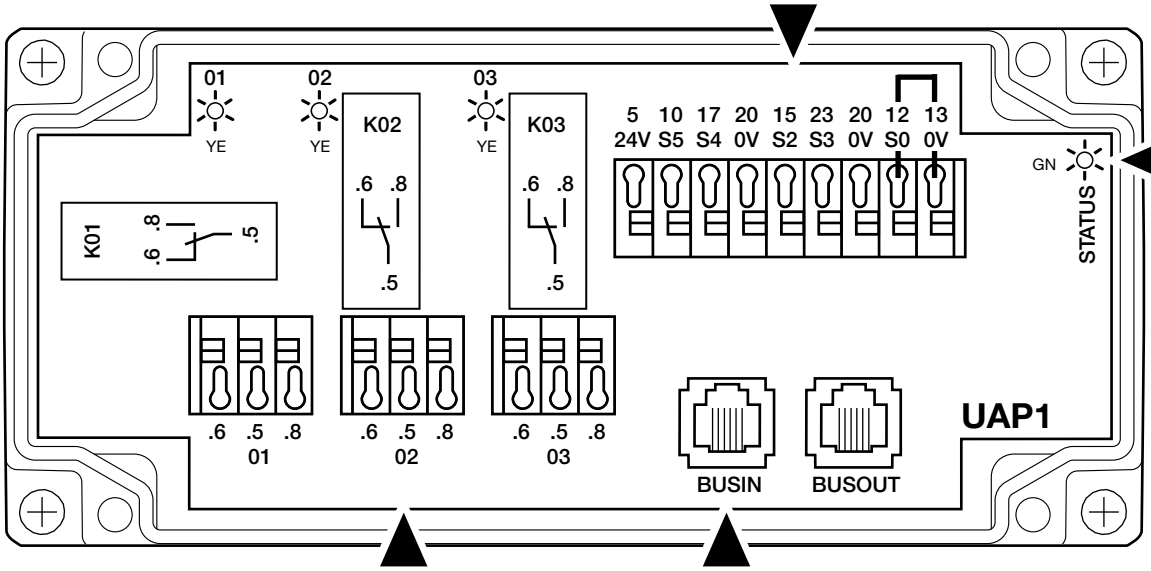
01
02
03
YE
YE
YE
K01
K02
K03
.6 .8
.5
5 10 17 20 15 23 20 12 13
24V S5 S4 0V S2 S3 0V S0 0V
GN
STATUS
.6 .5 .8
01
02
03
BUSIN
BUSOUT
UAP1

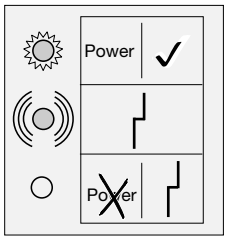
Power
Power

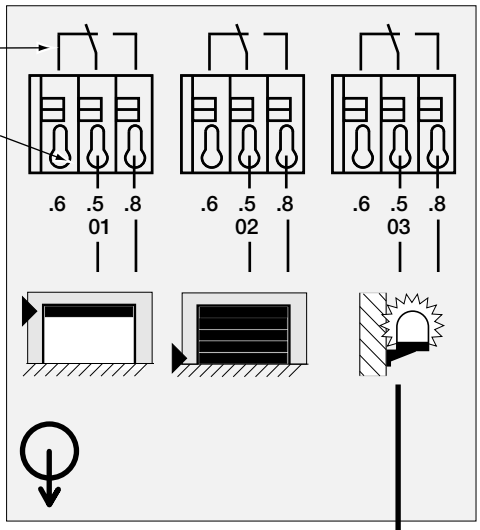
max. 2,5 A/30 V DC
500 W/250 V AC
max. 1,5 mm²
.6 .5 .8
01
02
03

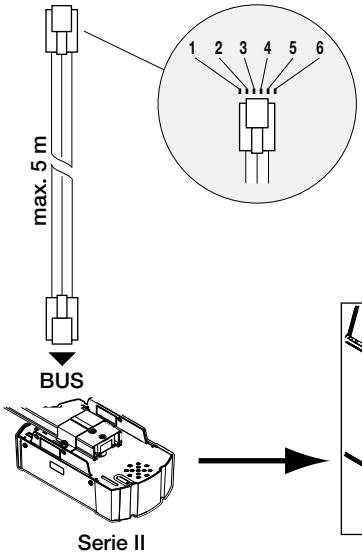
1 2 3 4 5 6
max. 5 m
BUS
Serie II

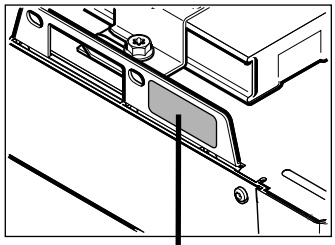

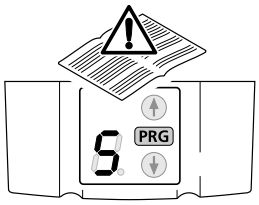
PRG

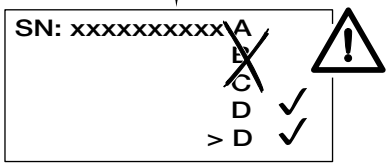
SN: xxxxxxxxxxA
B
C
D
> D

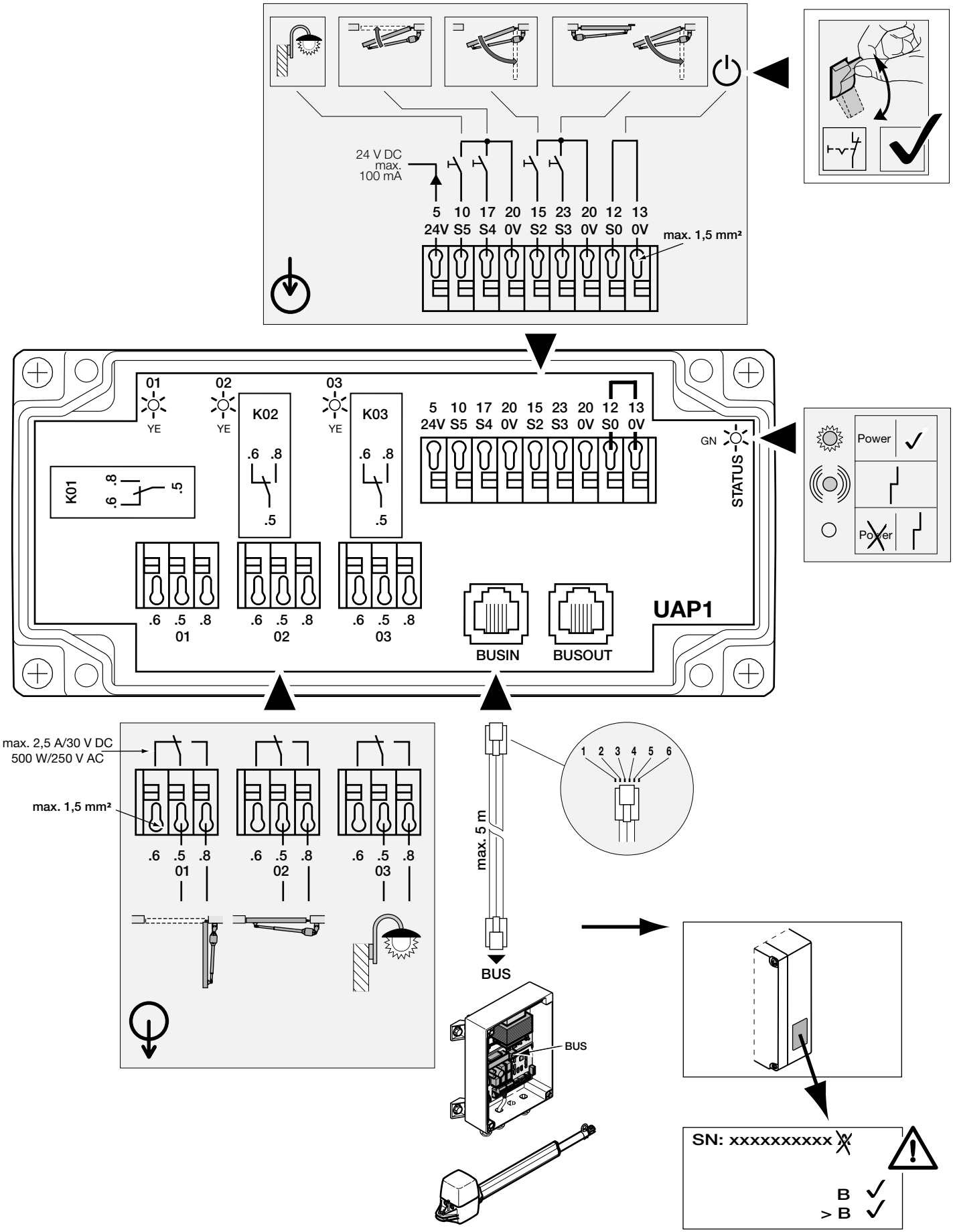
24 V DC
max.
100 mA
5 10 17 20 15 23 20 12 13
24V S5 S4 0V S2 S3 0V S0 0V
max. 1,5 mm²
01 02 03
YE YE YE
K01
K02
K03
.6 .8
.5
GN
STATUS
Power
UAP1
.6 .5 .8
01
02
03
BUSIN
BUSOUT
max. 2,5 A/30 V DC
500 W/250 V AC
max. 1,5 mm²
max. 5 m
1 2 3 4 5 6
BUS
SN: xxxxxxxxxx
B
> B

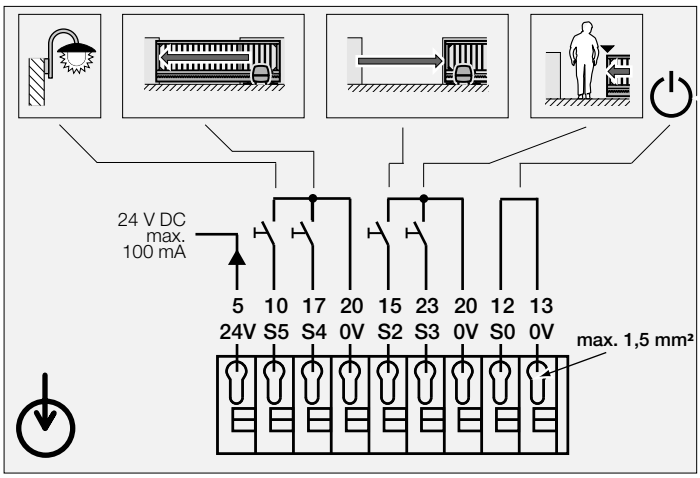
24 V DC
max.
100 mA
5 10 17 20 15 23 20 12 13
24V S5 S4 0V S2 S3 0V S0 0V
max. 1,5 mm²

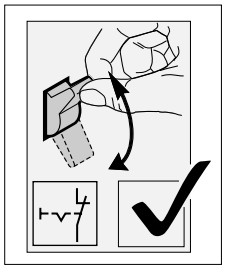

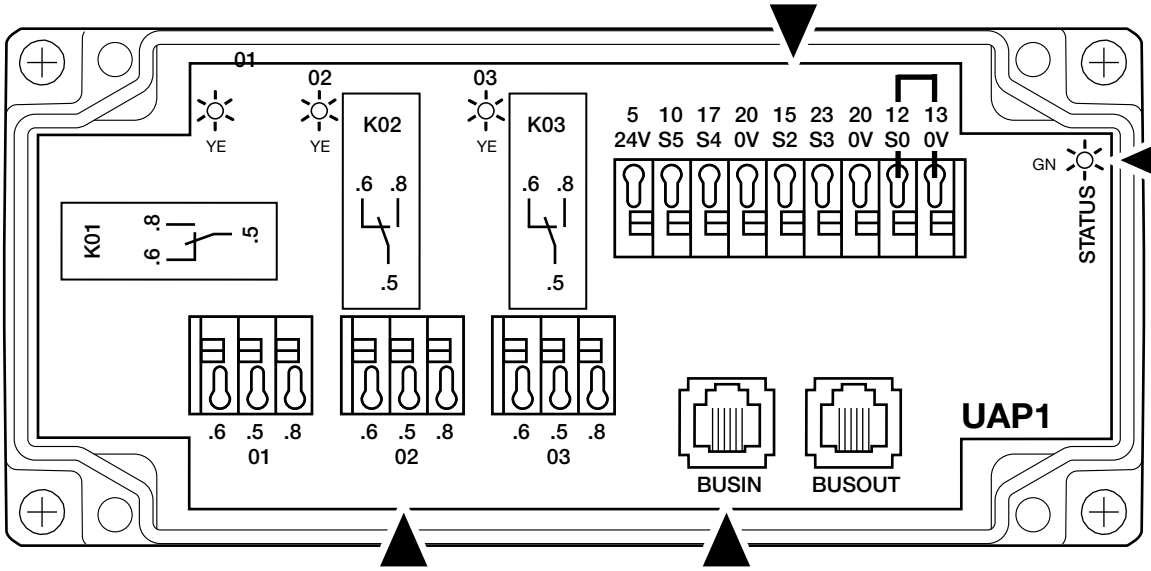
01
02
03
YE
YE
YE
K02
K03
K01
.6 .8
.5
5 10 17 20 15 23 20 12 13
24V S5 S4 0V S2 S3 0V S0 0V
GN
STATUS
.6 .5 .8
01
.6 .5 .8
02
.6 .5 .8
03
BUSIN
BUSOUT
UAP1

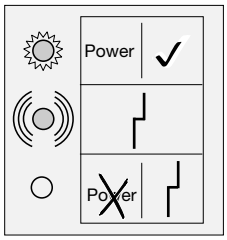
Power
Power

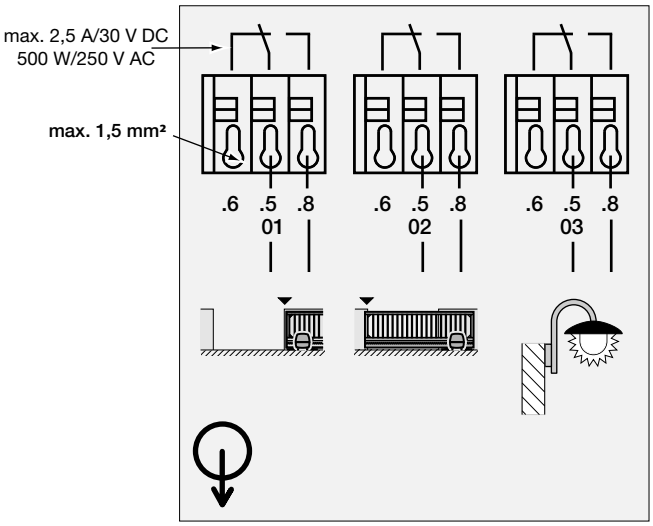
max. 2,5 A/30 V DC
500 W/250 V AC
max. 1,5 mm²
.6 .5 .8
01
.6 .5 .8
02
.6 .5 .8
03

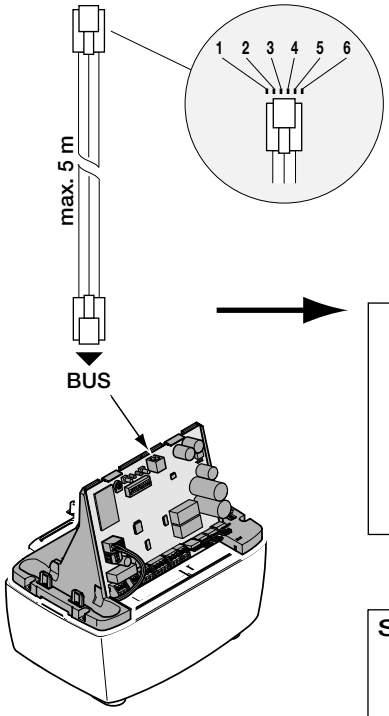
1 2 3 4 5 6
max. 5 m
BUS

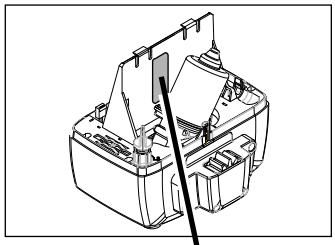

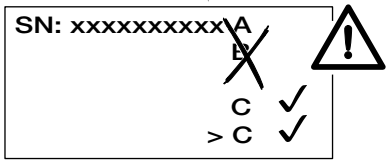
SN: xxxxxxxxxxA
B
C
> C

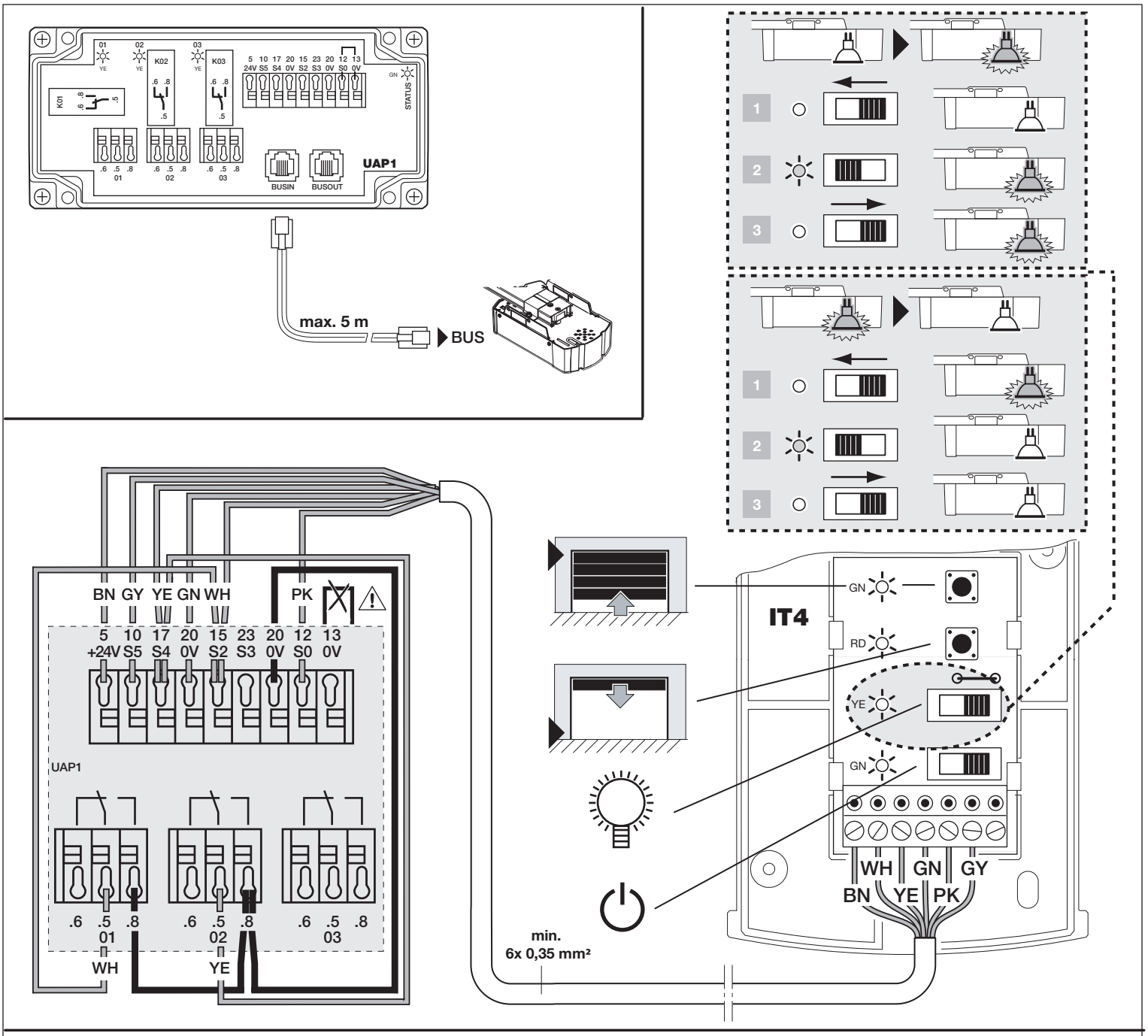
UAP1
BUSIN
BUSOUT
STATUS
max. 5 m
BUS
1
2
3
BN GY YE GN WH
PK
5 10 17 20 15 23 20 12 13
+24V S5 S4 0V S2 S3 0V S0 0V
UAP1
.6 .5 .8
01
02
03
WH
YE
IT4
GN
RD
YE
GN
WH GN GY
BN YE PK
min.
6x 0,35 mm²

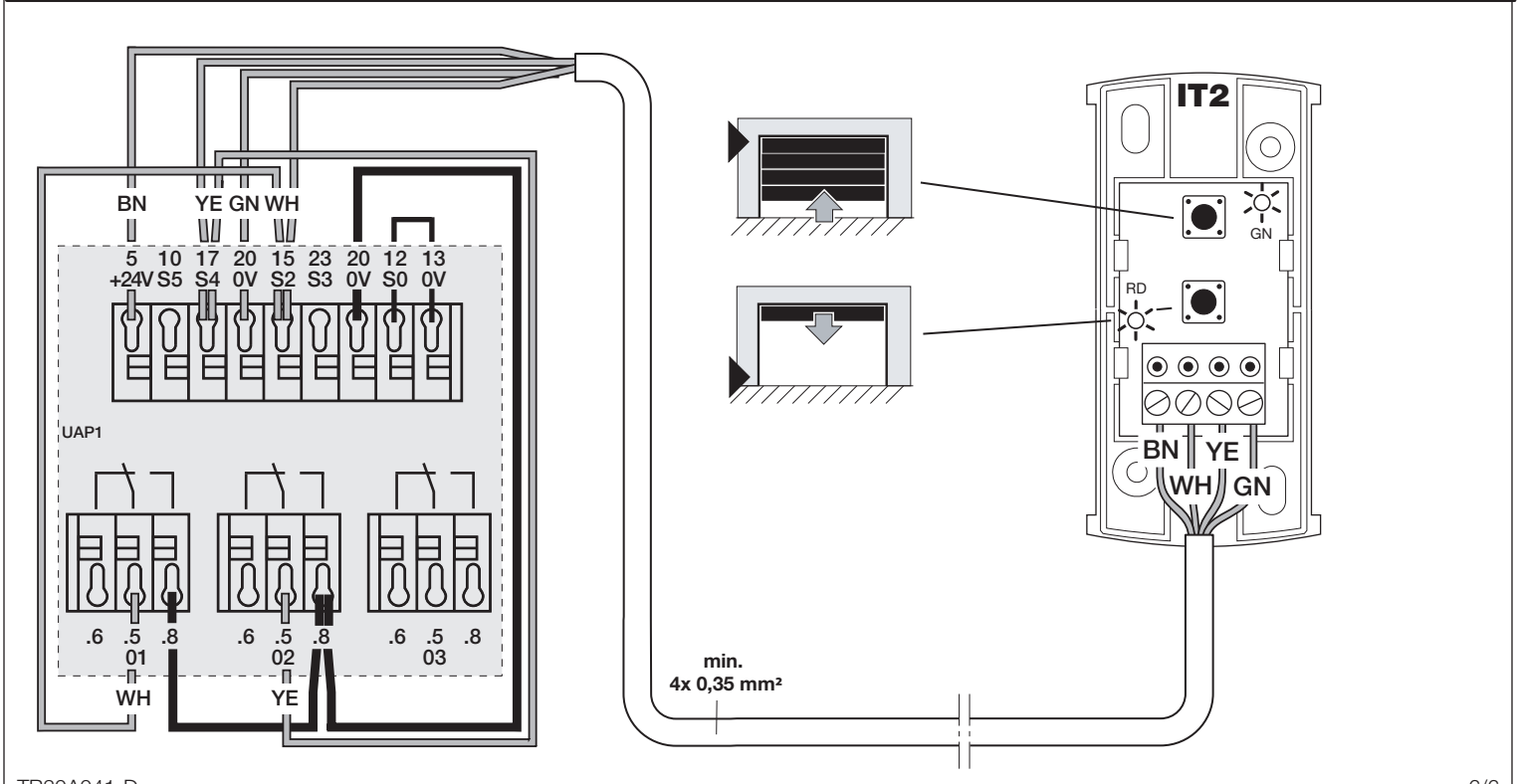
BN YE GN WH
5 10 17 20 15 23 20 12 13
+24V S5 S4 0V S2 S3 0V S0 0V
UAP1
.6 .5 .8
01
02
03
WH
YE
IT2
GN
RD
BN YE
WH GN
min.
4x 0,35 mm²